SECTIONAL Doors

DOORS ANGEL MR®

Since 1967

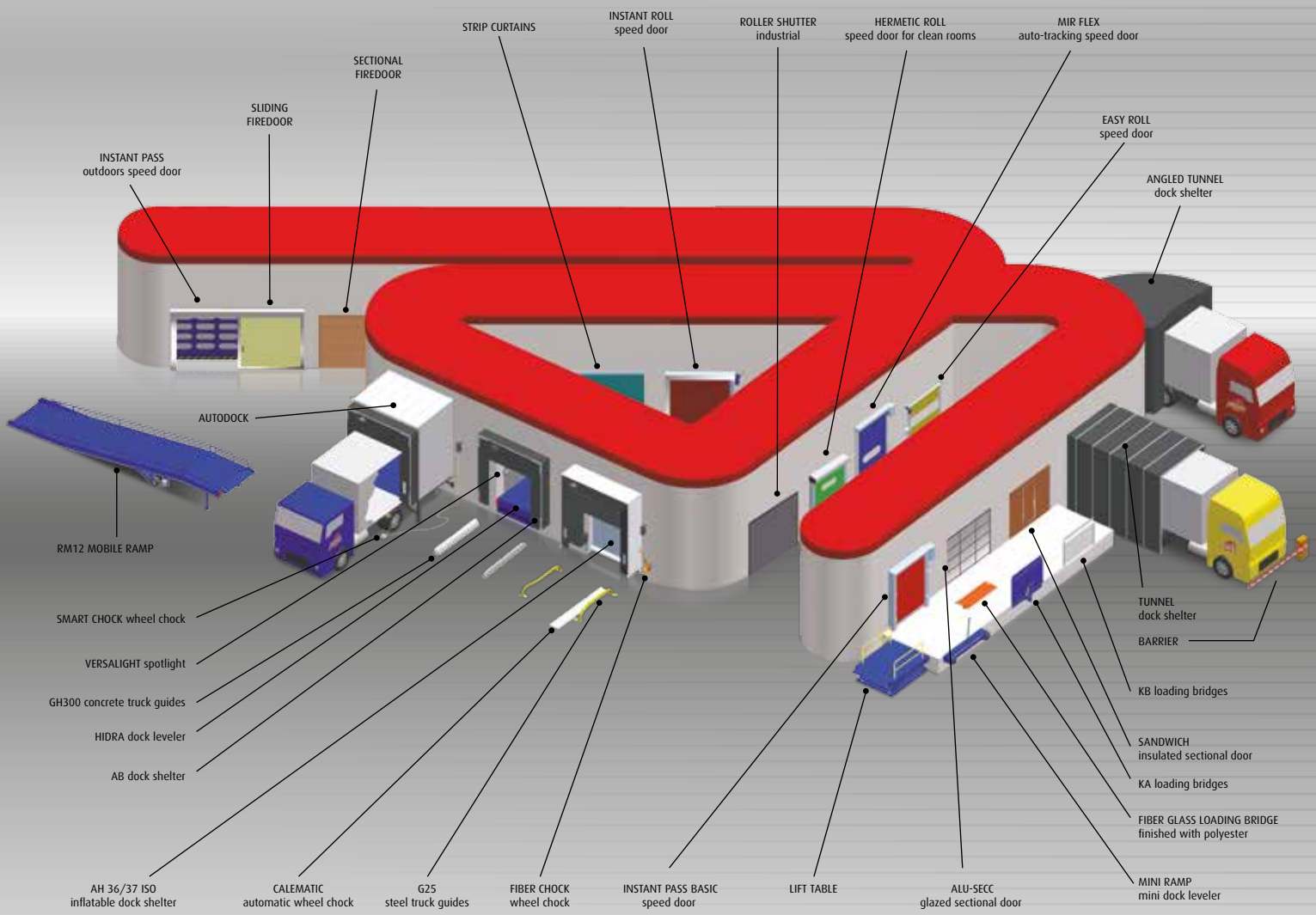

EXPORTING OVER 50 COUNTRIES SINCE 1967

www.angelmir.com

The passion for the work well done, is the key of the Angel Mir growth.

We are manufacturers with 50 years experience in industrial equipment for access management and logistics. We have developed special doors that are references within the industry. Patented systems, with own identity, have been created from our will to meet our customer's demands.

All custom-made solutions are developed to resolve technical, operational, secure and aesthetical requirements.

Ángel Mir
President

Angel Mir factories
with over 22.000 m²

www.angelmir.com

Energy efficiency

Some products of **Angel Mir**® have been designed to provide significant energy efficiency and reducing consumption of resources.
With our experience, we support and help our customers to carry out the projects with maximum energy savings through the most appropriate choice of our products. Also, depending on the sector, we recommend the most durable and suitable equipment for each application.

Raw Materials

All these years, **Angel Mir**® has always counted on local and European suppliers that provide the best raw materials to achieve the best performance and durability of its loading bay equipment's.

INDEX

Great thermal insulation for logistics

SANDWICH sectional doors
40 and 80 mm. for loading points

Greater brightness in the industrial unit

Glass doors
ALU-MIX
ALU-SECC
ALU-SECC VISION

Integrated in modern architecture

Glass doors
ALU-MIX
ALU-SECC
ALU-SECC VISION

Elegance

Glass doors
ALU-MIX
ALU-SECC
ALU-SECC VISION

Maximum transparency

Glass doors
ALU-SECC VISION

Design for door and façade

Glass doors
ALU-MIX
ALU-SECC
ALU-SECC VISION
SANDWICH

Adapted to different sectors

Glass doors
ALU-MIX
ALU-SECC
SANDWICH

For commercial industrial units

Glass doors
SANDWICH

The sectional doors form **Angel Mir®** are versatile doors that, due to their design and construction, can be adapted, in a safe and stylish manner, to a variety of architectural styles and to the most demanding conditions of use. They suit for both residential and industrial applications, and the great advantages of insulation and sealing, as well as safety and ease of use, make the sectional doors from Ángel Mir an effective and hard-wearing solution.

They are made basically by a series of panels that are lifted by lateral guides and compensated through a system of springs.

As their guide and lifting system has different configurations, it is possible to easily adapt them to any type of construction.

The great variety of finishes, such as sandwich panels in different colours, noble woods, marine board, etc., allow a perfect harmonization with the architectural style employed.

Sealing joints around the whole perimeter and between panels ensure a great insulation against the external inclemency thus avoiding that water, dust or air currents entering, also preventing losses of air conditioning. They have an exceptional smooth operation. The parts slide upwards on sturdy galvanized steel guides, by means of adjustable rollers of synthetic material that include ball bearings. This system provides smooth and quiet operation with minimal friction. As the compensating springs are very effective and are calculated by a computer program, the operation is smooth and without excess efforts. The connection between panels is achieved by continuous hinges made of extruded aluminium.

Sectional doors offer many **added values** that other locking systems do not have:

- **Insulation and sealing.**
- **They do not occupy interior surface.**
- **They do not reduce the useful void.**
- **They do not need large side spaces.**
- **They do not invade the road outside.**
- **They fill internal obstacles (bridges, cranes, beams...).**
- **Safety and reliability.**
- **Wide range of models.**

SANDWICH MODEL

The **sandwich panels** are manufactured with two galvanized and pre-lacquered steel sheets having a high resistance to oxidation. In the chamber formed between them, high density polyurethane foam is injected, thus achieving a high thermal and acoustic insulation factor and a high mechanical resistance.

The panels can be manufactured in different thicknesses: from 40 to 80 mm., according to the insulating requirements. The panels of 80 mm. are intended for sectional doors in refrigerated storage facilities. The sealing between panels is achieved by polyurethane elastic joints.

The **Sandwich sectional doors from A ngel Mir**® are the perfect equipment for energy-saving and secure locking in industrial units where regulating the air conditioning is required.

Technical characteristics
- Thickness: 40 mm.
- Sheets thickness: 0.5 mm.
- Available widths: 500 mm and 610 mm.
- Weight per surface unit: 11.5 to 12.2 Kg/m2.
- Polyurethane density: 40.5 Kg/m3 (free of CFC).
- Thermal transfer coefficient: K= 0.50 / 0.53 W/m2.ºK.
- Acoustic transfer coefficient. Weighted value of RW=26,5 dBA.
- Supplement of longitudinal steel to screw to the hinges is included.

Automatisms
Any of the described on p. 33.

Dimensions
Width 8.500 mm.; height 7.500 mm.
To ask for other sizes.

Options
- Built-in pedestrian door.
- Side pedestrian door.
- Peepholes.
- Ventilation grilles.
- Panels thickness.
- Components and options on p. 32.

Safety devices
- Safety brake by cable breakage.
- Safety brake by spring breakage.

Finishing
- Surface of embossed sheet.
- Standard lacquers.
- Can be painted in any colour of the RAL chart.
- Paint Oxiron®
- Interior colour, white 9002.

See finishing and thickness options at p. 29.

Sandwich panel sectional doors with peepholes.

Sandwich panel sectional doors with peepholes and pedestrian door in car dealer.

Interior view of sandwich sectional doors in fire station.

Sandwich panel sectional doors with pedestrian door.

Sloping sectional doors in fire station.

Micro-profiled sandwich panel sectional door in automotive company.

Sandwich panel sectional doors with pedestrian door in car wash.

Sandwich panel sectional doors.

SANDWICH 3G MODEL

The **reinforced sandwich sectional doors 3G** from **Angel Mir**® provide greater strength and sturdiness, so they are recommended in the following cases:

- Sizes from 6.000 mm. width or 6.000 mm. height.
- Areas experiencing strong winds or air currents, such as tunnels, mines, etc.
- Areas of intensive traffic flow.

Differences with a standard sandwich door:

- 1 or 2 reinforcement omegas in each panel to avoid deformation.
- Vertical and curve guides of bigger size and thickness.
- Double side hinges.
- Safety brake system suitable for weight and sizes of each door.
- Support shaft of larger diameter rolling drums.
- Large diameter metallic wheels.
- Greater length and thickness of the rollers shaft.

NOTE: In case of very large and heavy doors, these can be built without springs, but with a direct traction motor.

Sandwich panel sectional doors with peepholes in car dealer.

Double side hinge for 3″ guide

Safety of breakage protection cable for 3″ doors and standard

Part of reinforced and standard shafts

Standard 2″ and reinforced 3″ guides

Reinforced and standard omega

Standard 2″ and reinforced 3″ curves

Standard nylon rollers short and long 2″

Metal rollers short and long 3″

Sandwich panel sectional doors with peepholes.

Interior view of sectional doors in industrial unit.

Large sandwich panel sectional doors with side fixed and pedestrian door.

ALU-MIX MODEL Doors with character open to light.

The glass sectional doors **Alu-Mix**® from **Angel Mir**® combine the beauty and strength of the glass panels with the resistance and insulation of the sandwich panels. They offer a wide variety of possibilities.

They are especially suitable for places where taking advantage of the natural light or having a better visual field is required; they also combine in different ways to be adapted to the working requirements.

The glass panels are manufactured with exclusive aluminium profiles, setting up a series of frames that can be filled with different opaque or transparent materials; for example, sandwich panels where good insulation or acrylic glasses are needed and where good visibility and/or illumination is required. The standard glazing is made with compact polycarbonate, a material that stands out for its extraordinary mechanical resistance and its tolerance to wear caused by solar radiation, as it is equipped with an anti-UV filter on its external face. Other types of glazing can be supplied: cellular polycarbonate (in case further insulation is wished) or methacrylate. The opaque panelling is made with aluminium sandwich panel of 14 mm thickness. The glasses are sealed by rubber joints and the sealing between panels is achieved also with the same material.

The sandwich panels are of galvanized and pre-lacquered sheet with polyurethane foam inside.

Dimensions
Maximum width: 8.500 mm.
Maximum height: 6.000 mm.
For other sizes, please contact our commercial department.

Finishing
The aluminium profiles and the sandwich panels can be painted with the chosen colour from the RAL chart.

Safety devises
- Safety brake by cable breakage.
- Safety brake by spring breakage.

Automatisms
Any of the described on p. 33.

Wide range of possibilities
- **Number of opaque or glass panels.**
- **Door panel position: Lower, Central and Upper.**
- **Type of panel: Glassed and Opaque.**

Door **Alu-Mix**® in food industrial unit. (1SA)

Door **Alu-Mix**® in workshop. (1BO, 1SO)

Door **Alu-Mix**® in garage repair. (2CA)

Door **Alu-Mix**® in automotive industry. (4SA)

Door **Alu-Mix**® in automotive industry. (4SA)

Door **Alu-Mix**® in garage repair. (1BO)

Glazing options

Single polycarbonate
3 mm.

Double polycarbonate
3+3 mm.

Glass
3+3 mm.

Examples of some of the multiple possible combinations

Alu-Mix 1 BO

Alu-Mix 2 SA

Alu-Mix 2 CA

ALU-SECC MODEL

Glass doors with maximum transparency, design and functionality

The glass sectional doors **Alu-Secc**® from **Angel Mir**® stand up for their beauty and strength.

They are specially intended for places where having a view into the interior and taking advantage of the natural light and a secure closing is required.

They are ideal for car dealers, workshops open to the public or constructions which are aesthetically special.

The glass panels are manufactured with exclusive aluminium profiles, setting up a series of frames that can be filled with different opaque or transparent materials; for example, sandwich panels where good insulation is needed or acrylic glasses where good visibility and / or illumination is required. The standard glazing is made with compact polycarbonate, a material that stands out for its extraordinary mechanical resistance and its tolerance to wear caused by solar radiation, as it is equipped with an anti-UV filter on its external face.

Other types of glazing can be supplied: cellular polycarbonate (in case further insulation is wished) or methacrylate. The opaque panelling is made with aluminium sandwich panel of 14 mm thickness. The glasses are sealed by rubber joints and the sealing between panels is achieved also with the same material

Dimensions
Maximum width: 8.500 mm.
Maximum height: 6.000 mm.

Finishing
Both, the aluminium profiles and the sandwich panels can be painted with the chosen colour from the RAL chart, except for the interior trims that are delivered in grey.

Safety devises
- Safety brake by cable breakage.
- Safety brake by spring breakage.

Automatisms
Any of the described on p. 33.

Glazing options

Chess panel

Glazing panel

Sectional doors **Alu-Secc**® chess arrangement in sports hall.

Sectional doors **Alu-Secc**® inside sports hall.

Exterior view of glass sectional doors **Alu-Secc**® in water park with glass fixed top.

Interior view of glass sectional doors **Alu-Secc**® in water park with glass fixed top.

Sectional door **Alu-Secc**® with perforated sheet.

Uniform design of sectional door **Alu-Secc**® including façade.

Types of glass and aluminium panel

Transparent single polycarbonate of 3 mm.

Safety polycarbonate. Anti-scratch protection on both sides.

Transparent double polycarbonate of 3+3 mm.

Translucent single polycarbonate of 3 mm.

Cellular polycarbonate of 16 mm.; in bronze, white or translucent.

Aluminium sheet of 3 mm.

Aluminium sandwich panel of 6 mm.

Deploye sheet.

Aluminium perforated sheet.

Aluminium louvres for ventilation.

Door **Alu-Secc**® in garage.

Doors **Alu-Secc**® in fire station.

Alu-Secc® chess arrangement in fire station.

Interior view **Alu-Secc**® chess arrangement.

Exterior view **Alu-Secc**® doors with cellular polycarbonate.

Interior view **Alu-Secc**® doors with cellular polycarbonate.

Special sectional doors **Alu-Secc**® coated with aligned aluminium blades.

Interior view sectional doors **Alu-Secc**® in fire station.

Detail levelled sectional door **Alu-Secc**®.

ALU-SECC VISION MODEL

NEW

Glass doors having maximum transparency, design and functionality.

The glass sectional doors **Alu-Secc® Vision** from **Angel Mir®** stand up for their beauty and strength.

They are specially intended for places where having a view into the interior and taking advantage of the natural light and a secure closing is required.

They are ideal for car dealers, workshops open to public or constructions which are aesthetically special.

The glass panels are manufactured with exclusive aluminium profiles, setting up a series of horizontal frames that can be filled with acrylic glasses 6 mm thickness where good visibility and / or illumination is required. They stand out for their extraordinary mechanical resistance and for including an anti-scratch protection on both sides. Besides, being equipped with an anti-UV filter on their external face, they are resistant to wear caused by solar radiation.

Dimensions
Maximum widht: 6.000 mm.
Maximum height: 5.000 mm.

See sizes as per configuration.

Sectional door **Alu-Secc® Vision** in automotive industry.

Glazing configurations

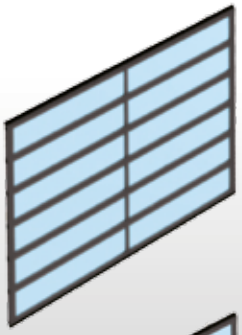

Divided glass panel
Maximum size (width): 6.000 mm.

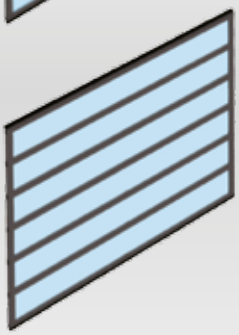

Long glass panel
Maximum size (width): 6.000 mm.

To ask for special sizes.

Sectional door **Alu-Secc® Vision** in garage repair.

Alu-Secc® Vision doors with divided glass panel in garage.

Alu-Secc® Vision doors with long glass panel in showroom.

FIBER-SECC MODEL Ideal for outdoors including marine and corrosive environments.

The sectional door **Fiber-Secc Inox 316**® from **Angel Mir**® is the perfect door to be used outdoors and in corrosive and marine environments.

It is light, very resistant to impacts and corrosion and easy to clean. It is manufactured with insulating panels type of polyester and fiberglass sandwich. The interior finishing consists of a white Gel Coat and the exterior finishing of Gel Coat in different standard colours.

The guides and ironwork are made with stainless steel 316 and the torque springs comply with the quality requirements imposed by the standard DIN 17223-C.

The option of the springless weight compensation systems guarantees a longer service life with much less maintenance.
Optionally, it can be equipped with one or two lower panels that include anti-impact and self-repairing system. This mechanism assures a greater resistance to the usual blows in this kind of facilities, avoiding frequent repairs of panels and consequently expensive invoices. See last pictures p. 21.

Differences with a conventional sectional door:
- Composed sandwich panels.
- Exterior faces of polyester, reinforced with fiberglass and filled of polyurethane foam.
- Standard thickness 40 mm.
- Lower panel very resistant to impacts.
- Self-repairing panel, optional.
- With springs and counterweights (only on vertical doors). Optional without springs (on automatic door).
- Guides and ironworks in stainless steel AISI 316.

Maximum dimensions:
5.500 x 6.000 mm.

Sectional door **Fiber-Secc**® in sea salt warehouse .

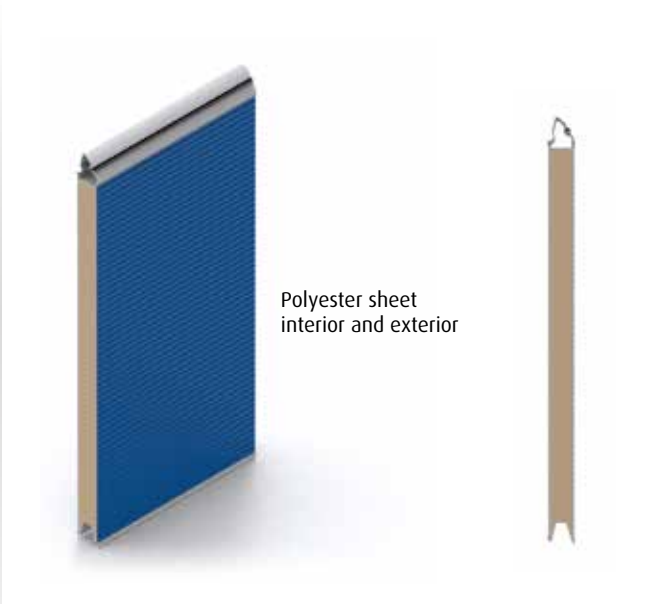

Fiber-Secc® doors in composting plant.

Fiber-Secc® door in salt industry.

Fish market with **FFiber-Secc**® doors.

Fiber-Secc® doors in tuna plant dock.

Fiber-Secc® doors in motorway salt warehouse.

Fiber-Secc® with self-repairing lower panel in fish market.

ECO-DOCK MODEL **Sectional doors for loading docks**

Sectional doors with peepholes in loading docks.

The loading points **Angel Mir®** are the result to combine three equipment with three specific functions:

- **Loading ramp**: bridges incline and void between the dock and vehicle.
- **Shelter:** isolates, protects and maintain climatic conditions when loading and unloading.
- **Sectional door**: closes and isolates thermally.

With the sectional door, manufactured with sandwich panels, a perfect sealing is guaranteed through sealing joints, while, at the same time, due to polyurethane being injected between sheets, isolates thermally the place. It can be manufactured in different types of lifting depending on the building characteristics. The door can be manual or automatic driven and can include mixed control panels, ramp/door.

Options
- Stainless steel ironworks and guides.
- Panels of 80 mm. for refrigeration facilities.
- Fiberglass panels for very corrosive environments.
- Anti-impact panels.
- Peepholes.
- Safety switch to cancel the ramp in manual doors.

To ask for our special rates regarding standard sizes.

Guidance sizes for standard door voids for docks (in mm.)

	WIDTH	HEIGHT	
HIDRA ramp	2.800	3.000	
HIDRA ramp	3.000	3.000	
TELESCO ramp	3.000	3.600	(Sectional door ahead ramp)
TELESCO (Isoperfect) ramp	3.200	4.000	(Sectional door ahead ramp)
TELESCO (Isoperfect) ramp	3.200	4.600	(Sectional door ahead ramp and down to the floor)

Sectional doors, dock levellers Hidra and Verslight lights on loading dock.

Mixed control panels; door + dock leveller

RS200L+CS250

Combi electromechanical motor for ramp and door.

RS300V+CS250

Combi electronic motor for ramp and door with telescopic auto-return.

Interior view of a loading dock with ECO-DOCK doors.

Sectional door in logistic centre. High lifting model.

Logistic centre with pedestrian doors.

Lintel options

• Reduced

Ideal when minimum space to fold the door.

Maximum light sizes: 6.000 x 5.000 mm. (width x height)
Maximum area: 30 m^2
Maximum weight: 350 kg
Minimum lintel: 200 mm. (horizontal guide = light width + 1.000 mm.)
Maximum lintel: 300 mm. (horizontal guide = light width + 700 mm.)

• Normal

The normal lifting system is the most suitable because it allows the best operation of the door. A 450 mm lintel is required for both manual and automatic versions.

Maximum sheet weight (kg): 800 kg

Maximum light sizes: 8.500 x 7.000 mm. (width x height)
Maximum area: 48 m^2
Maximum weight: 660 kg
Minimum lintel: 450 mm.

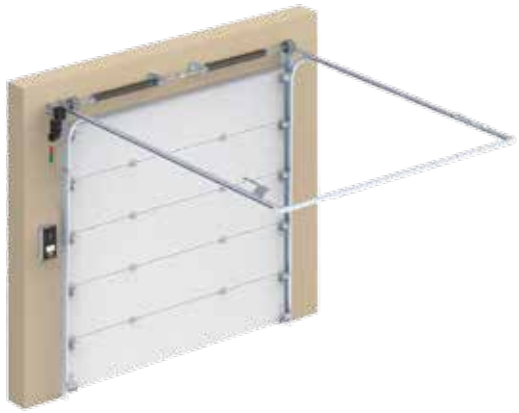

• Normal on incline

This system allows making the most of all the advantages of a normal lifting because, as it follows the slope of the roof, it is possible to gain interior height; without surpassing the 35º gradient.

Sheet maximum weight: 800 kg.
Maximum incline: 35º

Maximum light sizes: 6.000 x 5.000 mm. (width x height)
Maximum area: 30 m^2
Maximum weight: 350 kg
Minimum lintel: de 450 mm. a 600 mm.
Horizontal guide maximum incline: 35º

Lintel options

• High lifting

It is considered high lifting when the lintel measures between 800 mm. and 3000 mm, in which case the horizontal available space is reduced, taking then advantage of the existing lintel.

Sheet maximum weight: 800 kg.

Maximum light sizes: 8.000 x 6.000 mm. (width x height)
Maximum area: 48 m²
Maximum weight: 800 kg
Minimum lintel: 600 mm.
Maximum lintel: 4.400 mm.

• High lifting with incline

It allows to take the maximum advantage of the interior height of the building and, at the same time, to follow the slope of the interior roof, never surpassing the 35º gradient.

Sheet maximum weight: 800 kg.

Maximum light sizes: 8.000 x 6.000 mm. (width x height)
Maximum area: 48 m²
Maximum weight: 800 kg
Minimum lintel: 600 mm.
Maximum lintel: 4.400 mm.
Horizontal guide maximum incline: 35º

• Vertical lifting

In case of a lintel with equal or greater size than the useful height, it is possible to use the vertical lifting system (guillotine) to take advantage of the whole interior useful space. (Minimum horizontal available space).

Sheet maximum weight: 800 kg.

Maximum light sizes: 8.000 x 6.000 mm. (width x height)
Maximum area: 48 m²
Maximum weight: 800 kg
Minimum lintel: alto luz + 370 mm.

Lintel options

• Model ECO loading point lower springs

NEW SYSTEM LOWER SPRINGS

Maximum light sizes: 3.200 x 3.200 mm. (width x height)
Maximum area: 10,2 m²
Maximum weight: 150 kg
Minimum lintel: light height + 300 mm.
Centre springs: 800 mm.

• Model ECO loading point upper springs

Maximum light sizes: 3.200 x 3.200 mm. (width x height)
Maximum area: 10,2 m²
Maximum weight: 150 kg
Minimum lintel: light height + 300 mm.
Centre springs: 800 mm.

• Model ECO loading point high lifting lintel

NEW SYSTEM LOWER SPRINGS

Maximum light sizes: 3.200 x 3.200 mm. (width x height)
Maximum area: 10,2 m²
Maximum weight: 150 kg
Minimum lintel: 1.700 mm.
Centre springs: 800 mm.

Occupied spaces

Side motor

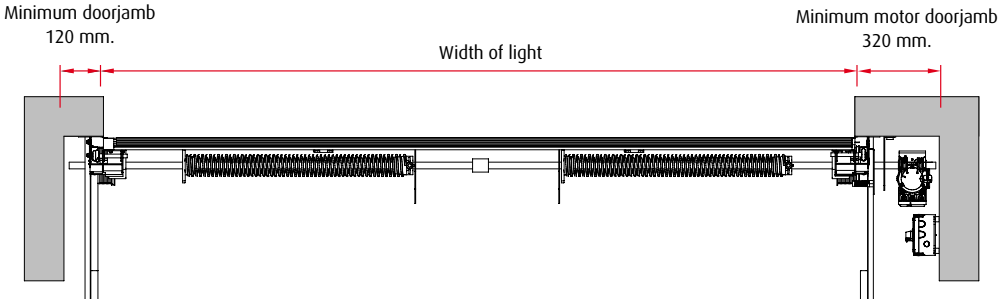

Front motor

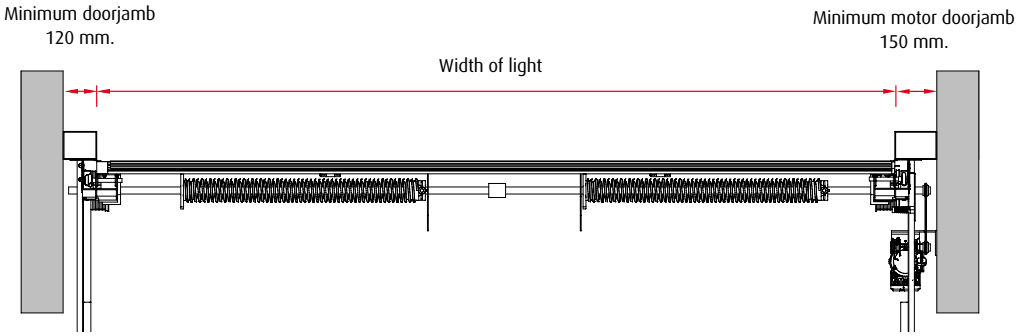

Manual with chain

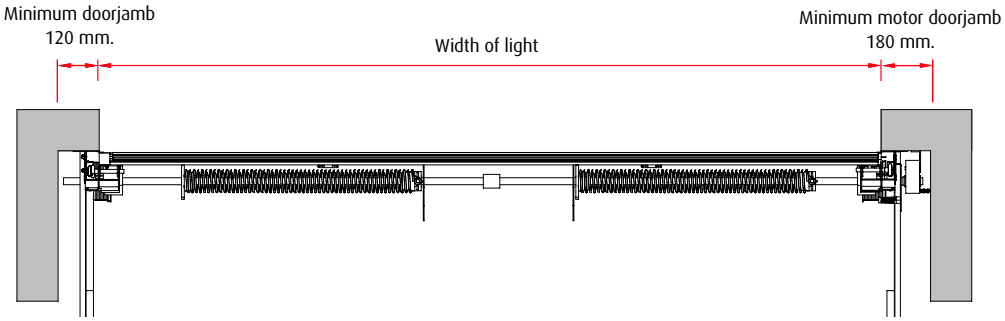

Manual

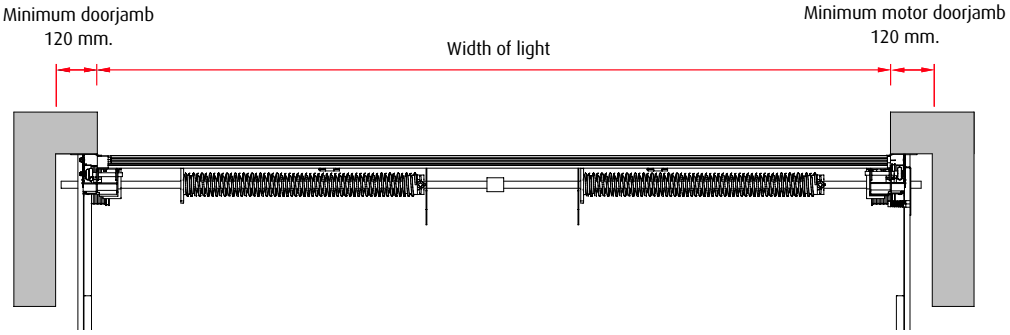

Peephole options

Rectangular peephole:
609 x 203 mm.

Rectangular peephole:
610 x 350 mm.

Round peephole:
Ø 330 mm.

Ventilation grille options

Ventilation grille:
344 x 138 x 40 mm.

Ventilation grille:
350 x 160 x 35 mm.

Ventilation grille:
550 x 260 x 35 mm.

Ventilation grille:
1050 x 360 x 35 mm.

Interior view of door with rectangular peephole and ventilation grille.
Peephole 610 x 350 mm. Grille 1050 x 360 x 35 mm.

Sectional doors with rectangular peephole. Peephole 609 x 203 mm.

Pedestrian door with round peephole, flat panic bar and high skirting board.

Panel finishes and thicknesses

Micro Profiled

40 mm.

Colour range standard

80 mm.

Only white RAL 9002

Rough corrugated

40 mm.

Dimensions

PANEL 40 mm.	WIDTH maximum	HEIGHT maximum
Without passage door	12.000	6.000
With passage door (low skirting board)	4.500	6.000
With passage door (high skirting board)	5.500	6.000

PANEL 80 mm.	WIDTH maximum	HEIGHT maximum
Without passage door	12.000	6.000

Any colour RAL chart on request

Micro profiled standard lacquered panels (approximate RAL colours)

M Profiled

White
RAL 9002

M Profiled

Silver grey
RAL 9006

M Profiled

Grey
RAL 9007

M Profiled

Grey
RAL 7016

M Profiled

Blue
RAL 5010

M Profiled

Red
RAL 3000

Standard lacquered rough panels (approximate RAL colours)

Rough

Green
RAL 6005

Rough

Brown
RAL 8014

Rough

White
RAL 9002

Rough

Silver grey
RAL 9006

Rough

Grey
RAL 7016

Rough

Blue
RAL 5010

Rough

Red
RAL 3000

Pedestrian doors incorporated in sectional ones

Centred pedestrian door

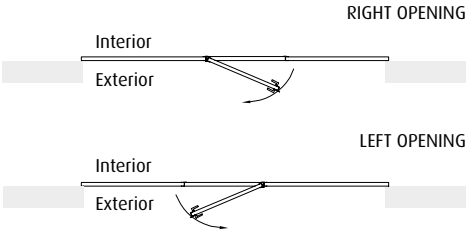

Right pedestrian door

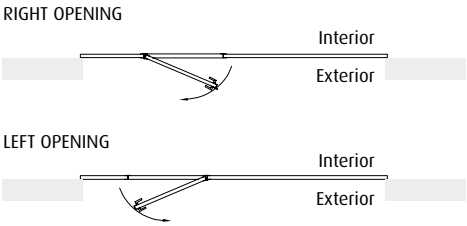

Left pedestrian door

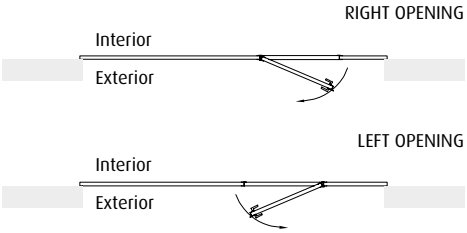

* To consider the openings seen from the interior.

Pedestrian door with yellow and black reinforced skirting board.

Pedestrian door with lower skirting board.

Part of safety spring and microphone.

Heights of skirting board with added passage door

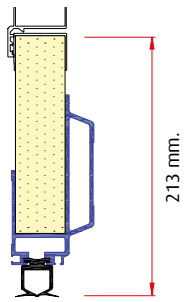

For doors with more than 4 m. width of light.

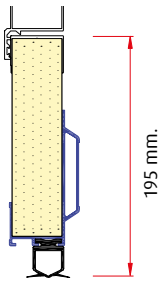

For doors up to 4 m.

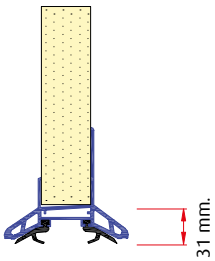

For doors up to 4,5 m. width of light. **Emergency exits.**

Side sandwich pedestrian doors

Side pedestrian door with aluminium frame and sandwich panel.

Side pedestrian doors with metallic PF frame.

Side pedestrian doors

Exterior opening with fixed top. Exterior view with metallic frame.

Exterior opening with fixed top and side. Exterior view.

Exterior opening. Exterior view.

Interior opening with fixed top. Exterior view with metallic frame.

Interior opening. Exterior view with aluminium frame.

Aluminium frame

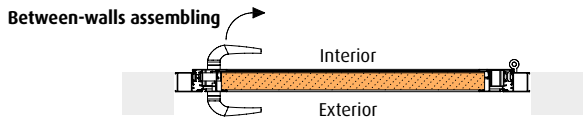

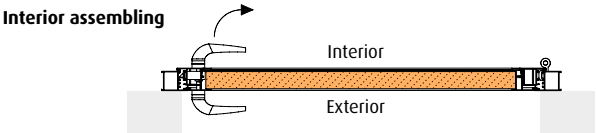

Metallic PF frame

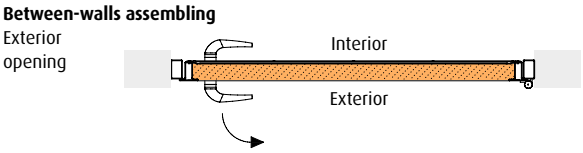

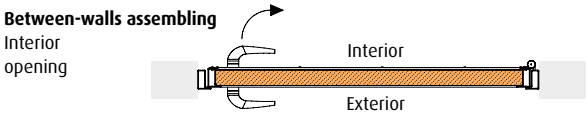

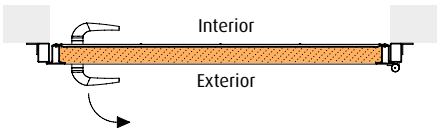

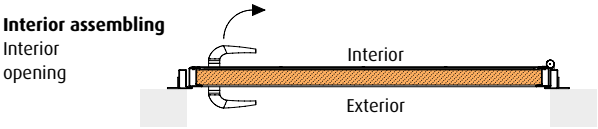

Components and options

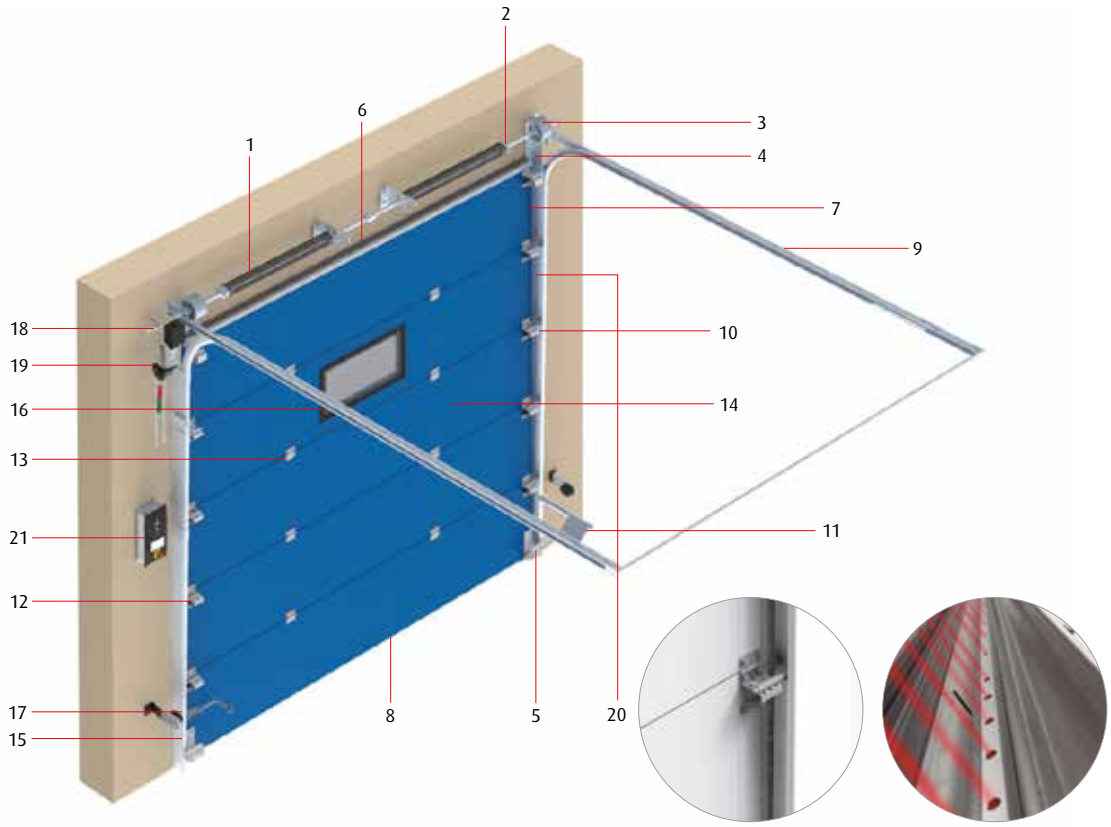

	Function	Description	Finishing
1	Compensation (STA)	Torsion springs	Blasting treatment and grey painted
2	Safety (STA)	Safety brake by spring breakage	Galvanized
3	Compensation (STA)	Rolling drums, as per the type of lifting	Casting aluminium
4	Lifting (STA)	Non-spin steel cable *	Galvanized
5	Safety (STA)	Safety brake by cable breakage	Galvanized
6	Sealing (STA)	Rubber upper joint	Black
7	Sealing (STA)	Rubber and PVC side joint	Black
8	Sealing (STA)	Rubber tubular lower joint	Black
9	Guiding (STA)	Sliding guide of steel sheet	Galvanized
10	Guiding (STA)	Nylon rollers with ball bearings	Galvanized metallic parts
11	Safety (STA)	Anti-exit and thrust blocks	Galvanized
12	Hinging (STA)	Adjustable consoles to support the rollers	Galvanized
13	Hinging (STA)	Middle hinges to support panels	Galvanized
14	Sheet	Sandwich panels Aluminium glass panels Wood panels	Standard lacquered. Optionally, painted with polyurethane paint or anodized.
15	Locking	Side catch	Galvanized
16	Illumination (OP)	Peephole	Polycarbonate and black rubber
17	Safety (OP)	Emitter and photocell mirror with adjustable support	Grey lacquered 9006
18	Opening and closing (OP)	Shaft industrial motor	
19	Release (STA)	Unlocking handle with chain	Galvanized
20	Safety (OP)	Photocell curtain L2500 mm.	
21	Opening and closing (OP)	Control panel	

* The anti-spin cables suffer less wear than the normal cables, considerably increasing their useful life.
* (STA) standard. (OP) optional.

Automatisms selection

Door situation	Operating system	Ramp included	Type of panel	Automatism recommended	Compulsory electrical safeties	Connection with ramp
Loading bay	Present operator	No	Plate integrated in motor. Switches on bottom panel.	HP - Dock - EL -QI HP - Dock - OV - QI	No	No
Loading bay	Present operator	Yes	Plate integrated in motor. Switches on mixed panel	HP - Dock - EL - CM HP - Dock - OV - CM	No	Yes
Loading bay	Keypress	No	External control panel PA	AP - EL - CE AP - OV - CE	Contact band and photocell or photocell curtain	No
Loading bay	Keypress	Yes	Mixed control panel PA with switches door and ramp	AP - EL - CM AP - OV - CM	Contact band and photocell or photocell curtain	Yes
Iso Perfect	Present operator	Yes	Special Iso Perfect HP	HP - EL	No	Yes
Iso Perfect	Keypress	Yes	Special Iso Perfect PA	AP - EL	Contact band and photocell or photocell curtain	Yes
Standard	Present operator	No	Standard control panel HP	HP - EL - CE HP - OV - CE (if there are other loading point doors with this type of motor)	No	No
Standard	Keypress	No	Standard control panel keypress PA	AP - EL - CE AP - OV - CE (if there are other loading point doors with this type of motor)	Contact band and photocell or photocell curtain	No

* The present operator automatisms must be operated from the side of the door. The operator must control the movement to avoid entrapment.
* The automatisms by keypress can be operated with remote drives: handles, remote controls, etc.

HP Present operator
AP Keypress
QI Internal plate with switch
CM Mixed panel
CE External panel

Characteristics of blasting and painted springs

These springs are standard for all the doors from Ángel Mir. The blasting springs meet the quality requirements imposed by the standard DIN 17223-C. They also have a traceability program from the beginning of the material casting to the set up and thermal treatment, being eventually subjected to a blasting effect.

The mentioned process consists of, once the spring is ready and before being painted, the "bombarding" with hundreds of small metallic particles at high speed and energy on to the exposed face of the metal is carried out. This process, in addition to improve the superficial finishing, produces a tension relief effect that increases the fatigue limit. These changes mean longer useful life and better response in the strength-weight ratio. The springs painted with a powder coating look better and, besides, the advantage of this system is the protection against corrosion.

"Bombarding" installation of particles and powder paint.

Part of spring wire before and after applying the blasting.

Our springs are calculated for 25.000 cycles. Optionally, 50.000 or 100.000 cycles.

SECCFIRE FIRE SECTIONAL 60′ and 90′ MODEL

Fire sectional door in warehouse

Previous test inner face.

Previous test outer face.

Test inner face.

Test outer face.

The main function of the **fire sectional door SeccFire®** is to subdivide the different rooms of the industrial unit in case of fire. Thanks to its design, it can remain open or operate as a normal sectional door both outdoors and indoors. Besides, it allows several types of elevation to be adapted to the available spaces, which makes it perfect for diverse applications such as theatres, goods lifts, car parks, conveyors, logistic warehouses, etc.

The whole structure is covered by materials that prevent flames, smoke and gases to escape and, at the same time, act as sealing joints that provide maximum sealing. The inner chamber is made of insulation composite having a density of 350 kg/m3 and a thickness of 60 mm. The finishing of the sheet structure is in smooth galvanized steel plate painted in white RAL 9010 or, optionally, in stainless steel 304 or 316. SeccFire includes an irreversible gear motor for intensive use, with built-in mechanical position switches; and it is located on the side of the door.

In case of fire, these doors guarantee a minimum resistance on both sides of the door of 60 or 90 minutes, depending on the model.

The control panel is connected to the fire alarm or to the smoke alarm; when receiving the alarm signal, the door drops through the motor movement or, in case of power failure, descends thanks to an UPS built into the control panel. Thanks to the safety system by auto-whitening photocells, a secure passage for people and vehicles is guaranteed.

Maximum dimensions:
EI60: 3.750 x 3.900 mm.
EI90: 2.500 x 2.600 mm.

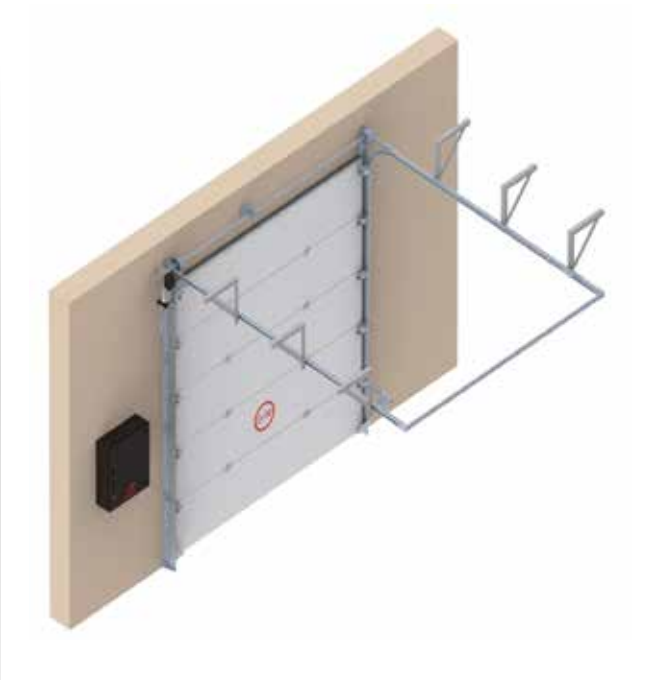

EI-SECC HIDRA FIRE SECTIONAL 120′ MODEL

The **fire-resistant sectional doors EI-Secc Hidra** have been designed to work as a normal sectional door under intensive use conditions and they are opened therefore with traditional switches.

This model is made up of a series of panels put together by means of hinges and composed of two assembled steel sheets, so that they form a chamber of 80 mm. thickness which is filled with mineral wool of 150 kgs / m3. The paint finishing of the panels is available in different RAL colours. The sealing joints are composed of several fire-resistant and intumescent materials. Optionally, both guides and panels can be made of stainless steel.

The power supply of the door is 220V single-phase feed by a battery which, in turn, feeds the hydraulic unit at 24 VDC and 2,2 Kw power, acting on a cylinder which drives a lifting system through cables and pulleys. It has anti-fall devices in case of cable breakage. The cylinder is calculated, for each door, according to the height and type of lifting. This model of fire-resistant door does not have compensating springs.

In the event of a fire, a signal is sent to the control panel, that automatically closes by gravity the door at a controlled speed until resting on the ground. The lowering manoeuvre can then only be stopped if the passage detection system picks up an obstacle, thanks to the photocell curtain. After an adjustable interval, the contact is checked again; if the passage is free, the descent continues.

Option on **acoustic sectional door:** 47dB.

Dimensions: EI-SECC Hidra is suitable for large sizes.

Fire-resistant sectional door in warehouse compartments.

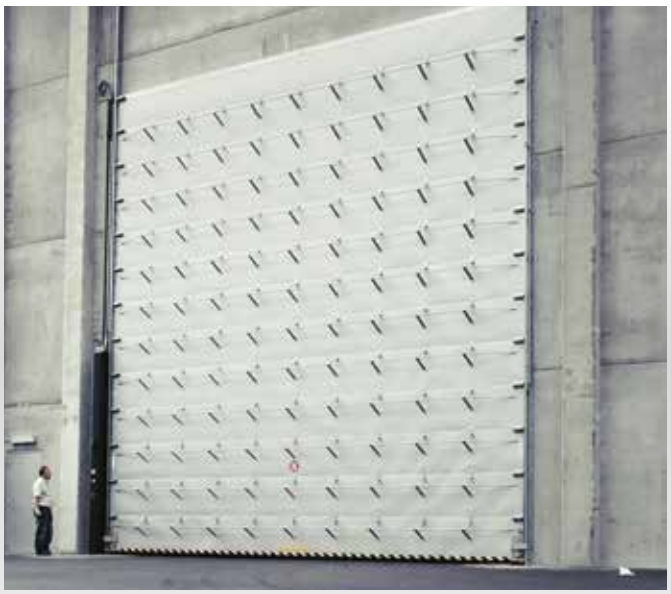

Large size **fire-resistant sectional** door.

Fire-resistant door **EI-Secc Hidra** in car park.

RIPENING SECC MODEL

Intended for fruit ripening, these sectional doors are of superior range to guarantee the adequate processing of the food with a hermetic and effective sealing.

The door **Ripening Secc®** certifies the control of special factors in terms of temperature, humidity, cleaning or heat conditions; it **provides greater tightness to the gas**, thanks to the high-quality insulating materials with which it is manufactured and that provide a superb guarantee for the fruit cooling and ripening.

The side of this model is made of white lacquered steel and galvanized steel medium hinges and it always includes a **double acrylic window** that works as an **emergency exit**.

With the special designed rail, there is no need to build additional door frames, since a levelling around the opening is sufficient in most cases.

The right operation of the door, whether manual or electrical, is guaranteed by the high quality of the materials, improving the fitting of the panels. In addition, they are equipped with the latest safety measures and available in several standard colours.

Fruit ripening doors versions:
- Sandwich model (with different lintel options).
- Stackable model without horizontal guides or springs. (See photo).

Maximum dimensions:
5.500 x 7.000 mm.

Ripening Secc doors stackable model.

Rock wool **MINERAL-SECC** MODEL

The sectional door **Mineral-Secc®** is a door intended to operate in places having high temperatures, where the polyurethane panels are not appropriate or where polyurethane is not allowed. Thanks to its characteristics it can be used as flame-arrester door.

This model consists on an internal aluminium structure, filled with rock wool and covered on both sides with lacquered steel sheet; and it is compensated by springs having the same lifting and operating system that a standard sectional door has.

To ask for sizes.

Interior of the panel filled with rock wool.

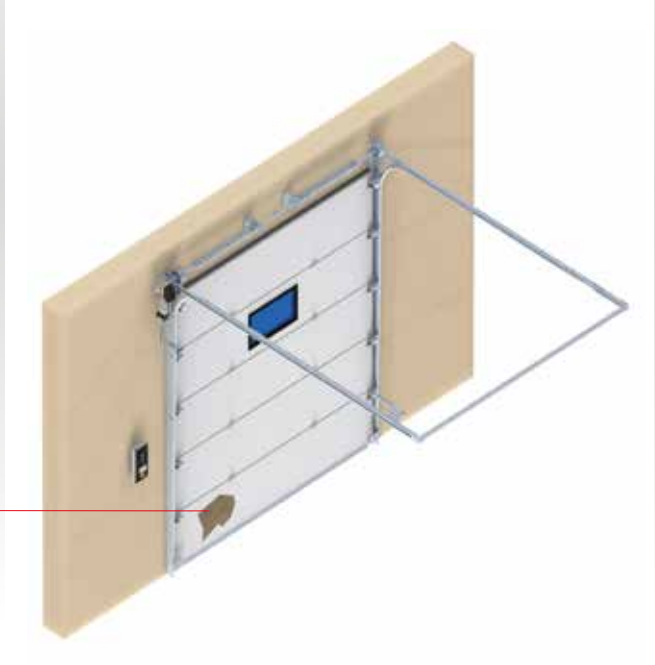

MINI COLD STORES MODEL

Special sectional door for mini cold stores. Opening towards the ceiling.
Custom-built manufacturing.

The **RESIDENTIAL SECTIONAL DOORS Angel Mir**® are versatile doors that, because their design and construction, can be adapted in a safe and stylish manner to the most varied architectural styles.

If it is true that for a long time the consumers have been considering the choice of a garage door as a matter of secondary importance when it comes to improve their homes, nowadays, we are all aware that this decision can affect both the aesthetics and value of the house. That´s why **Angel Mir**® offers you quality products that combine the charm and elegance of garage doors with the durability and strength of the sectional doors.

Our doors offer you great advantages of insulation, tightness, safety and ease of use, becoming an effective and lasting solution for your home. They are made with a series of panels that are lifted by side guides. They do not occupy interior surface and increase the useful void: they only require minimum spaces and do not invade the exterior road. Their operation is smooth and quiet with minimal friction.

ALUCOMIR resin

ALUCOMIR zinc

ALUCOMIR (Alucobón)

ALUCOMIR perforated

ALUCO-GLASS (glass or polycarbonate)

ALUCOMPACT vertical folding

SANDWICH Corten steel

Corten steel

Non-oxidized Corten steel, varnished

Wood imitation Unical smooth (light oak)

IPE solid wood with horizontal blades

Solid oak wood with vertical blades

Iroko wood blades

Marine wood board

Marine wood board white lacquered

ALUSECC

ALUMIX

SANDWICH (color RAL especial)

SNADWICH door with smooth panel

SPACELITE HT
translucent polyester, vertical stackable

SPACELITE HT
translucent polyester, vertical stackable

For further information, please consult our detailed product catalogues:

General Catalogue
Industrial doors and loading bay equipment

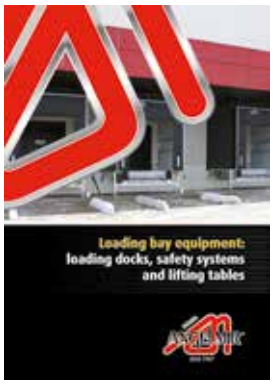

Loading bay equipment:
loading docks, safety systems and lifting tables

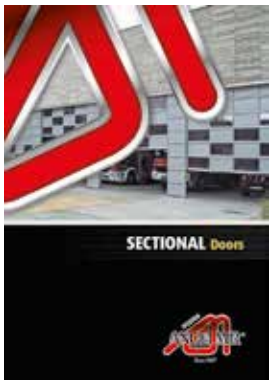

Sectional Doors

Speed Doors

Sectional doors

We are present in more than 50 countries
EUROPE, AFRICA, LATIN AMERICA, MIDDLE EAST

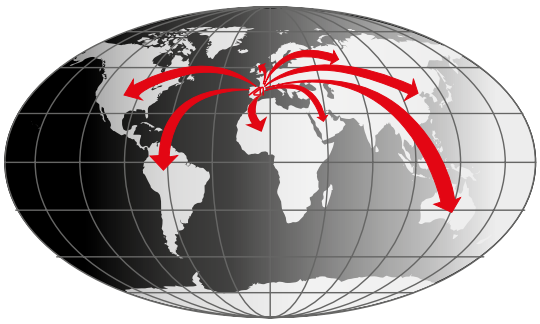

@angelmirporbisa angelmirporbisa angelmirporbisa angelmirporbisa

Distributor:

BARCELONA (Spain)
Tel.: (34) 972 640 620
Fax: (34) 972 642 451

info@angelmir.com
www.angelmir.com

Edition 2017